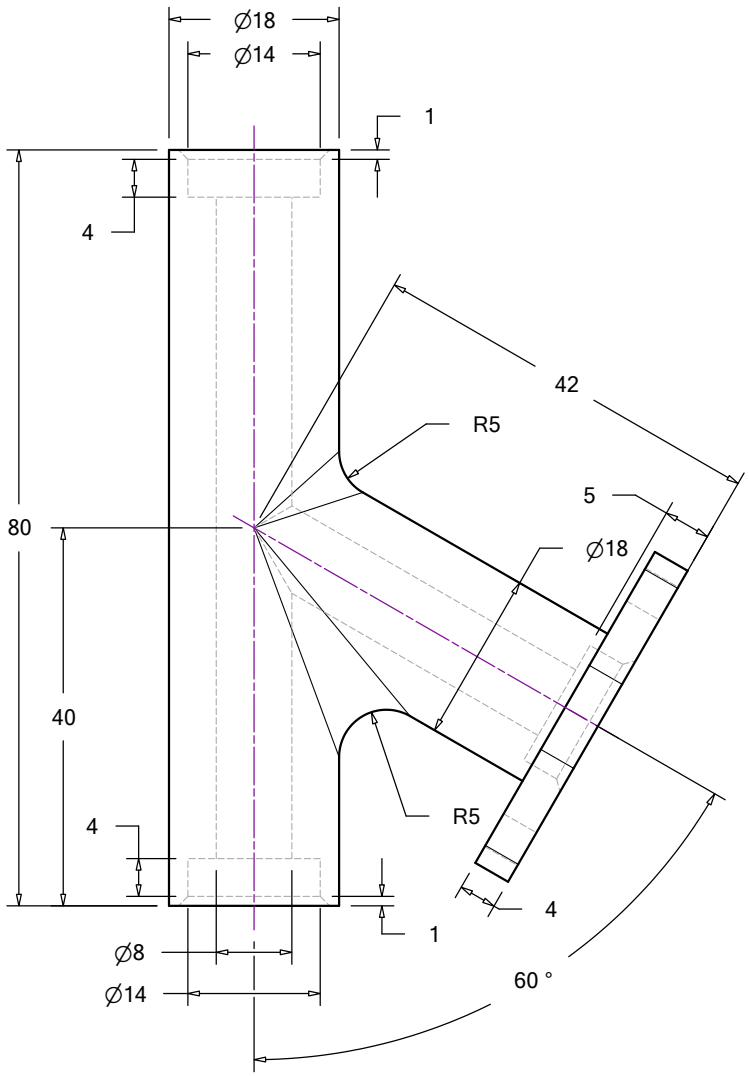

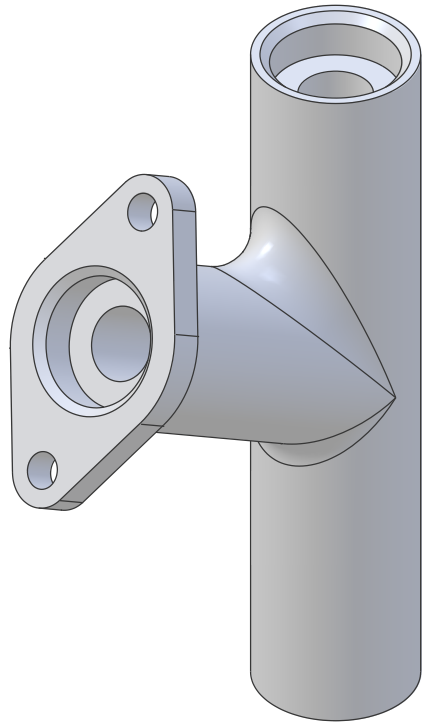

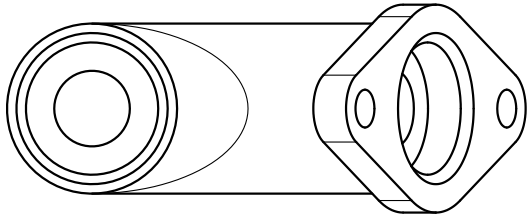

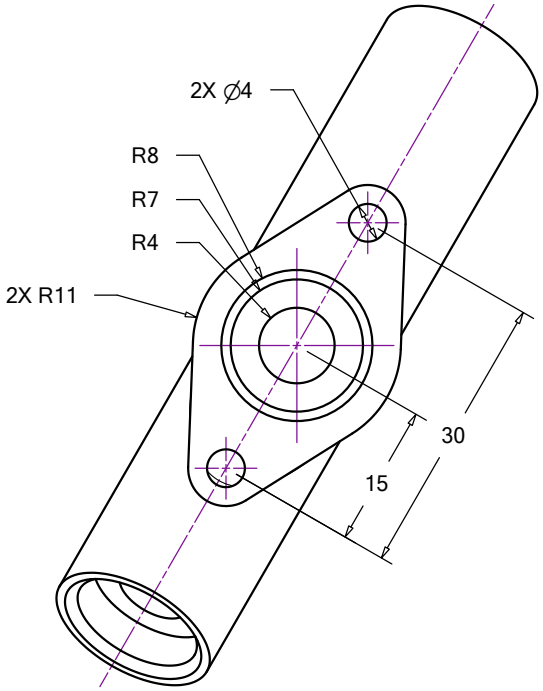

Exercise 9